• Controller Electric Circuit For Programmable Controller (STB-H108U)

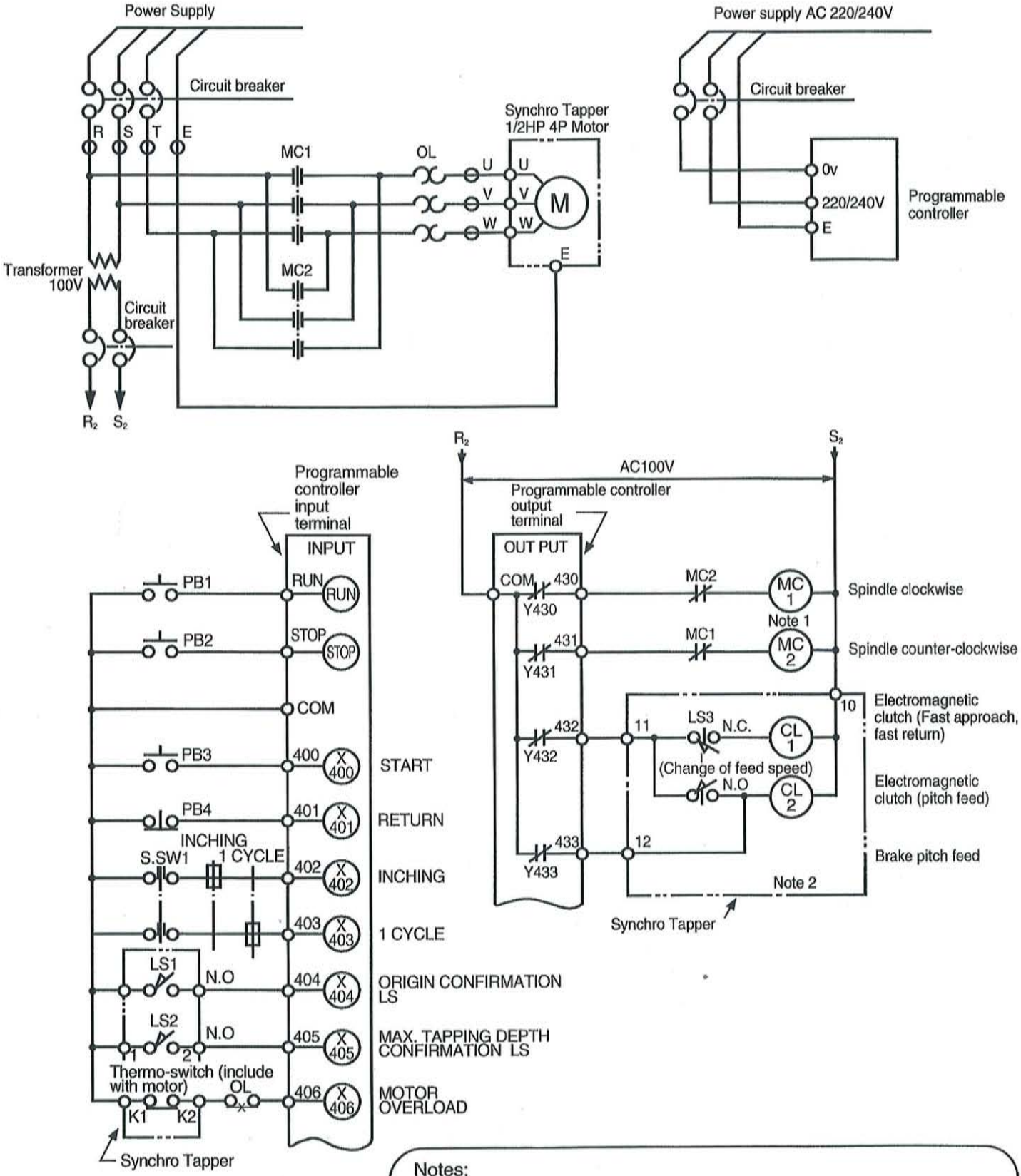

Notes:

1. Spindle rotation (clockwise and counter-clockwise) should be controlled by magnetic contactor (MC1, MC2) with mechanical interlock (supplied by customer).
2. AC100V source voltage is converted within the unit to DC45V for electro-magnetic clutches

• Control Program (STB-H/L108U)

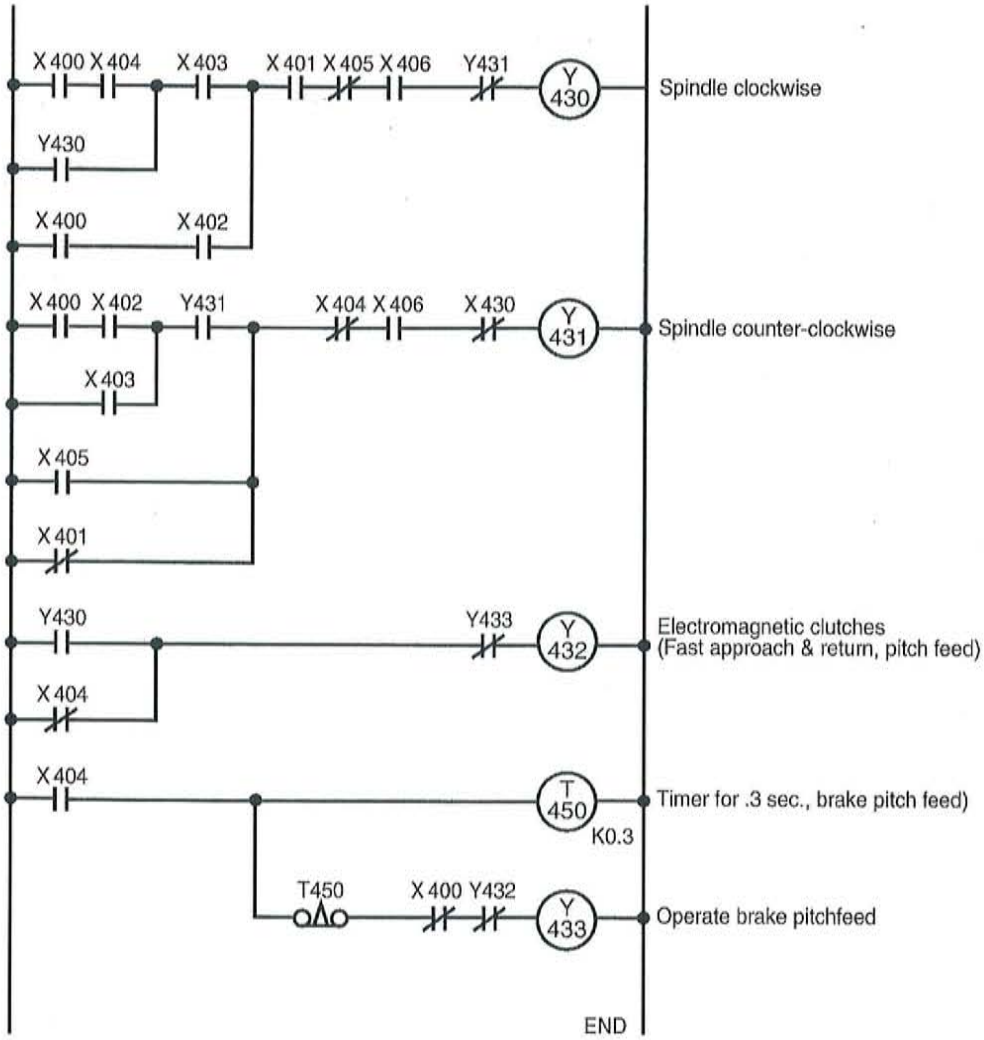

• Operation Chart for One Cycle

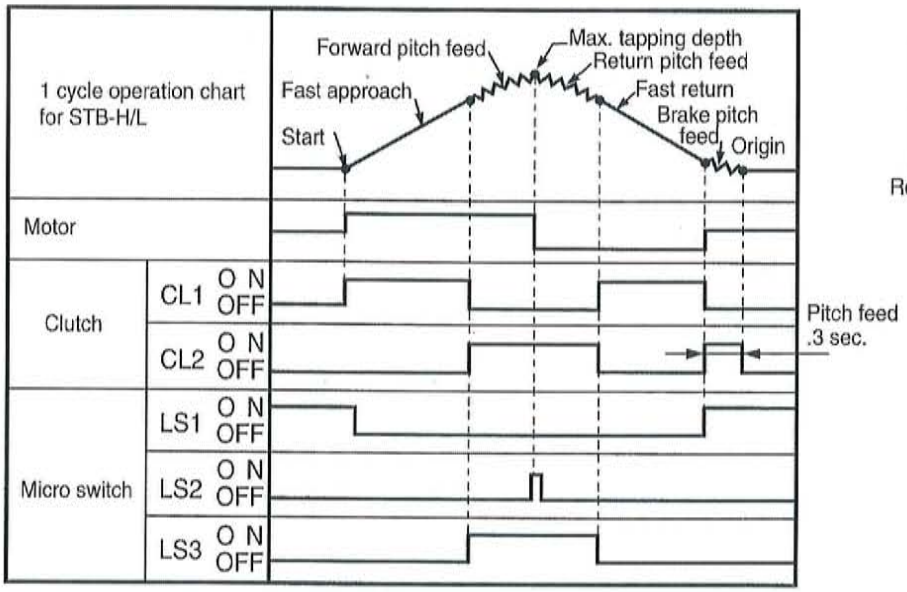
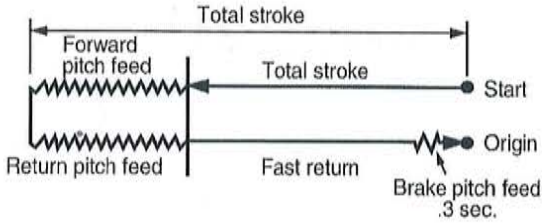
• Travel Chart for One Cycle